FLOATING AIR™ SELECT | SINGLE-ZONE | WALL-MOUNTED HEAT PUMPS

MODEL	Model Set	Unit	FSHW091C	FSHW121C	
	Indoor Model		FAHSW09A1C	FAHSW12A1C	
	Outdoor Model		FSHSR09B1C	FSHSR12B1C	
	Power Supply	V/Hz/ph	115V~,60Hz,1P		
	ENERGY STAR® Standard	Y/N	Y	N	
	ENERGY STAR – Cold Climate	Y/N	N	N	
COOLING	Rated Capacity @ 95°F	Btu/h	9,000	12,000	
	Cooling Capacity Range (Min.–Max.)	Btu/h	3,600-10,000	4,000-13,000	
	EER2 @ 95°F	Btu/h/W	12.50	10.20	
	SEER2	Btu/h/W	20.00	18.00	
	Cooling Operating Range	°F	5°F–118°F	5°F–118°F	
HEATING	Rated Capacity @ 47°F	Btu/h	9,500	12,000	
	Heating Capacity Range (Min.–Max.)	Btu/h	3,600-10,000	4,000-13,000	
	COP2 @ 47°F	W/W	4.10	3.40	
	COP @ 5°F	W/W	2.00	1.90	
	HSPF2	Btu/h/W	9.00	8.50	
	Rated Capacity Heating @ 17°F (-8.3°C)	Btu/h	6,800	8,800	
	Maximum Heating Capacity @ 5°F (-15°C)	Btu/h	6,000	7,500	
	Heating Operating Range	°F	-5°F–75°F	-5°F–75°F	
INDOOR AIRFLOW	Air Circulation (Max/H/M/L)	ft3 CFM	382/341/294/247	394/365/312/253	
	Sound Rating - Indoor (Max/H/M/L/Quiet)	dB (A)	42/39/37/35/32	42/39/37/35/32	
INDOOR FAN MOTOR	Output	W	46	46	
	Speed (Hi/Med/Lo)	r/min	1100/940/800	1154/992/800	
OUTDOOR AIRFLOW	Air Circulation (Hi) for Outdoor	ft3 CFM	1,295	1,295	
	Sound Rating - Outdoor (Hi)	dB (A)	53.0	53.0	
FAN MOTOR	Output	W	36	36	
	Speed (Hi)	r/min	850	880	
ELECTRICAL	Rated Current	Cooling (A)	6.7	10.7	
		Cooling (W)	720	1,176	
		Heating (A)	6.2	9.6	
		Heating (W)	679	1,034	
	MOP (Rating of Overcurrent Protective Device)	A	25	25	
	MCA (Minimum Circuit Ampacity)	A	14.6	15.6	
	Communication Wire Size and Type		4 x 18AWG	4 x 18AWG	
REFRIGERATION (R454B)	Moisture Removal	pints/hr	1.9	2.5	
	Refrigerant Charge Volume	oz.	21.2	21.9	
	Liquid Pipe	in.	1/4	1/4	
	Gas Pipe	in.	3/8	3/8	
	Max. Pipe Length (Total)	ft.	65.6	65.6	
	Max. Elevation (Indoor Units Higher Than Outdoor Unit)	ft.	49.2	49.2	
	Pre-charge Pipe Length	ft.	24.6	24.6	
	Additional Refrigerant Charge per Foot after 25 ft.	oz./ft.	0.22	0.22	
INDOOR UNIT	Dimension (W×H×D)	in.	33 7/8 ×11 2/8 ×8 4/8	33 7/8 ×11 2/8 ×8 4/8	
		mm	860×285×216	860×285×216	
	Packing (L×H×W)	in.	36 5/8 ×15 ×11 2/8	36 5/8 ×15 ×11 2/8	
		mm	930x285x380	930x285x380	
	Net Weight	lbs.	22.1	22.05	
		kg	10.0	10.0	
	Shipping Weight	lbs.	26.5	26.5	
		kg	12.0	12.0	
OUTDOOR UNIT	Dimension (W×H×D)	in.	28 1/8 ×21 2/8 ×9 4/8	28 1/8 ×21 2/8 ×9 4/8	
		mm	715x540x240	715x540x240 32 5/8	
	Packing (L×H×W)	in.	32 5/8 ×23 1/8 ×13 3/8	×23 1/8 ×13 3/8	
		mm	830x588x340	830x588x340	
	Net Weight	lbs.	52.9	57.3	
		kg	24.0	26.0	
	Shipping Weight	lbs.	57.3	61.7	
		kg	26.0	28.0	

Due to continuing research in new energy-saving technology, specifications are subject to change without notice.

Standard | With Registration

7YR. PARTS WARRANTY | 10YR. COMPRESSOR WARRANTY | 10YR. PARTS WARRANTY | 10YR. COMPRESSOR WARRANTY

DIMENSIONAL DRAWINGS: WALL-MOUNTED HEAT PUMP

INDOOR UNITS / FAHSW09A1C, FAHSW12A1C

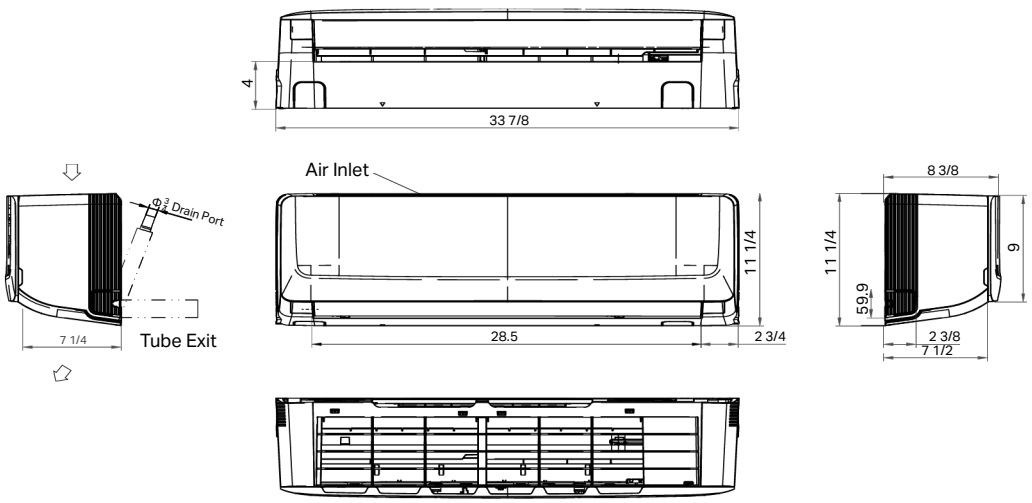

Model	W	H	D
FAHSW09A1C, FAHSW12A1C	33 7/8"	11 2/8"	8 4/8"

UNITS: INCHES (MM)

INDOOR UNITS / FAHFW18A3D, FAHFW24A3D

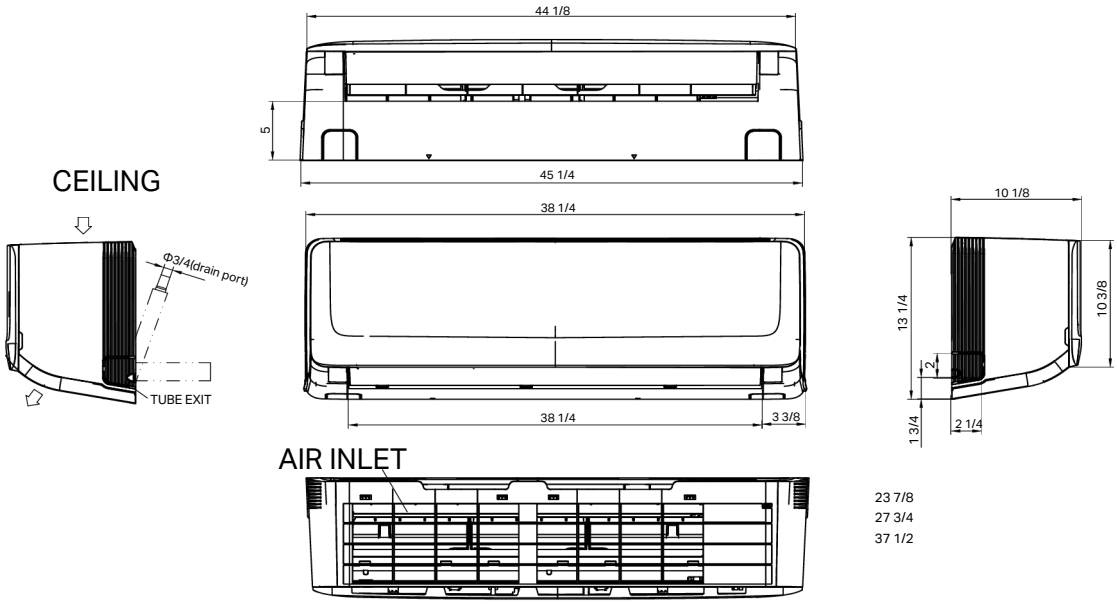

Model	W	H	D
FAHFW18A3D, FAHFW24A3D	45 2/8"	13 2/8"	10 1/8"

UNITS: INCHES (MM)

DIMENSIONAL DRAWINGS: WALL-MOUNTED HEAT PUMP

INDOOR UNIT / FAHSW36A3D

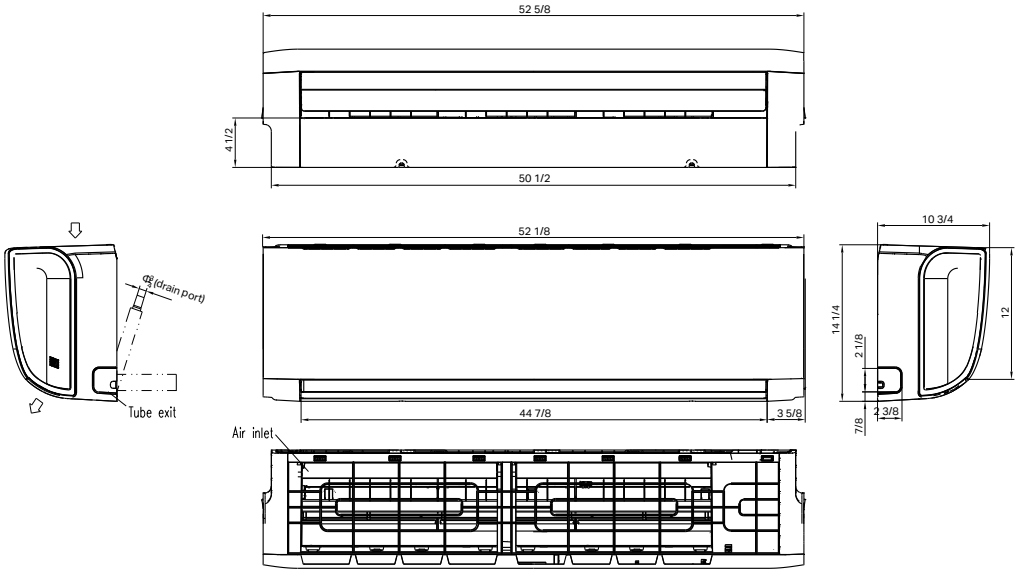

Model	W	H	D
FAHSW36A3D	52 3/8"	14 2/8"	10 6/8"

UNITS: INCHES (MM)

DIMENSIONAL DRAWINGS: OUTDOOR HEAT PUMP

OUTDOOR UNITS / FSHSR09B1C, FSHSR12B1C

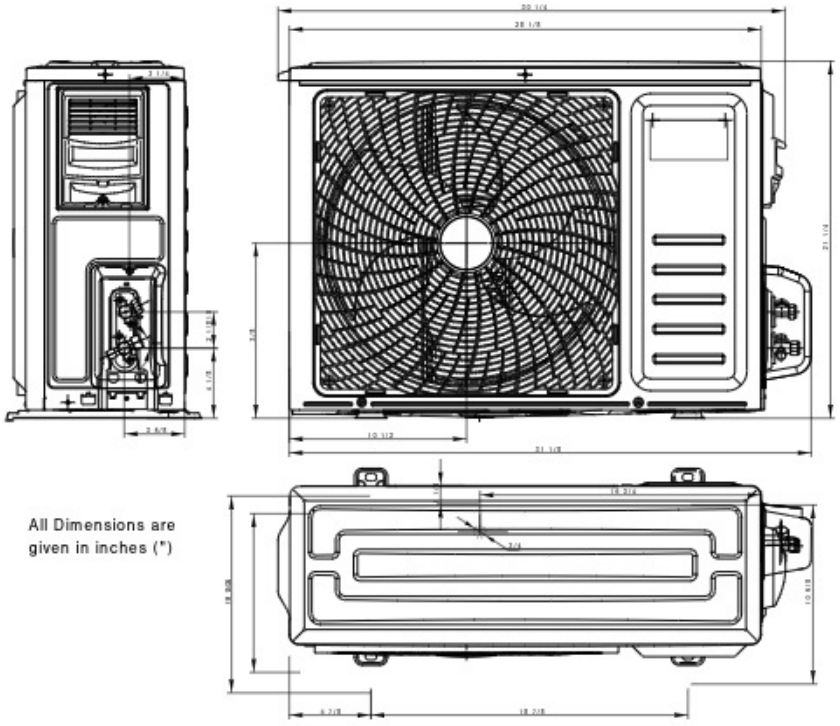

Model	W	H	D
FSHSR09B1C **FSHSR12B1C**	28 1/8"	21 2/8"	8 4/8"

UNITS: INCHES (MM)

OUTDOOR UNITS / FSHSR18B3D

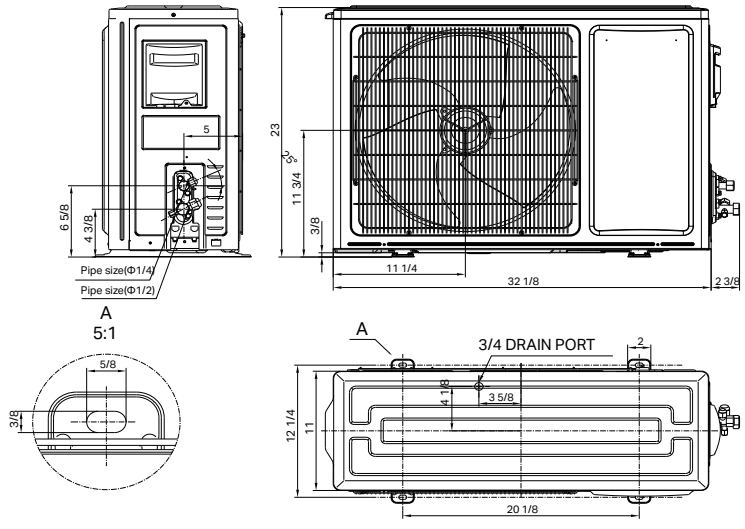

Model	W	H	D
FSHSR18B3D	31 7/8"	23	11

UNITS: INCHES (MM)

DIMENSIONAL DRAWINGS: OUTDOOR HEAT PUMPS

OUTDOOR UNITS / FSHSR24B3D

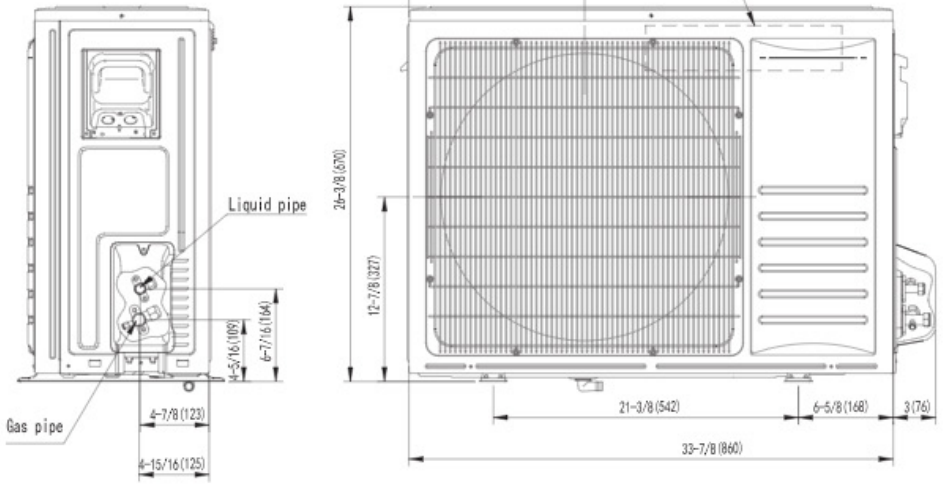

Model	W	H	D
FSHSR24B3D	33 7/8"	27 5/8"	12 2/8"

UNITS: INCHES (MM)

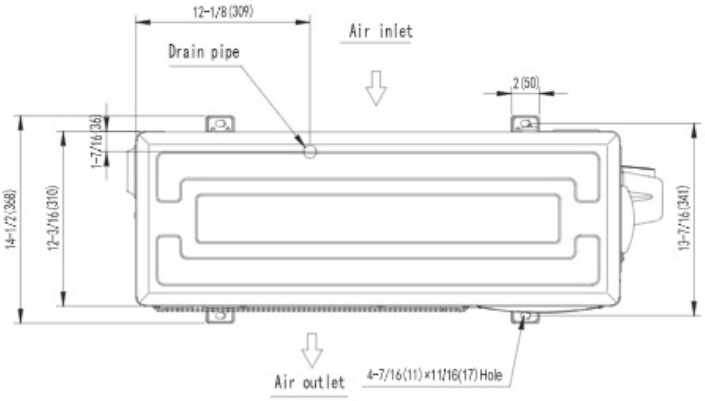

OUTDOOR UNITS / FSHSR36B3D

All Dimensions are given in inches (")

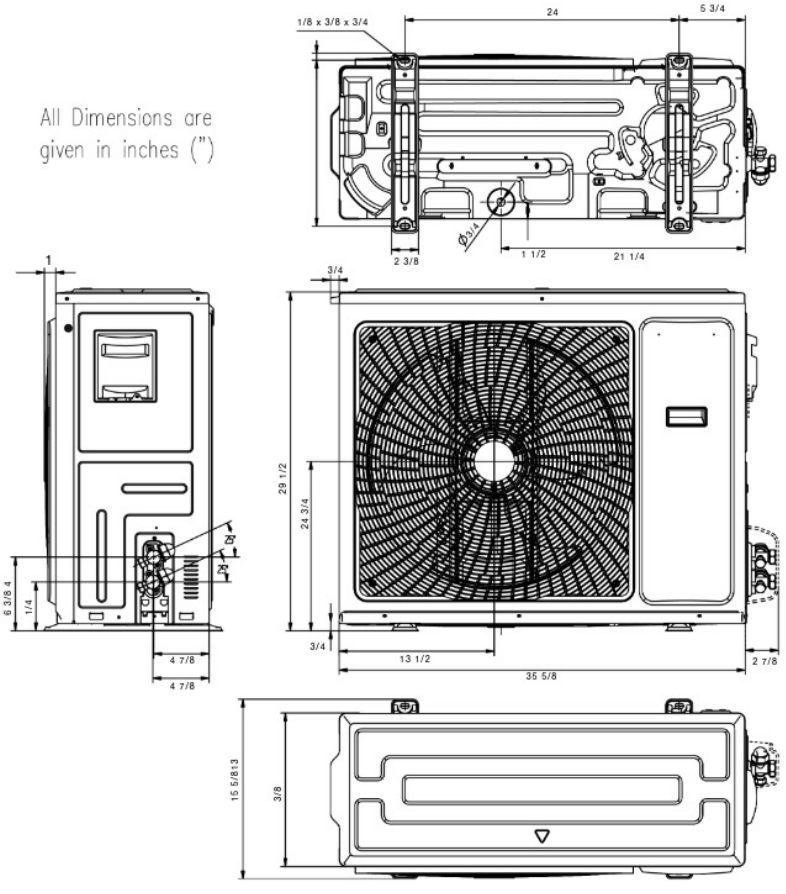

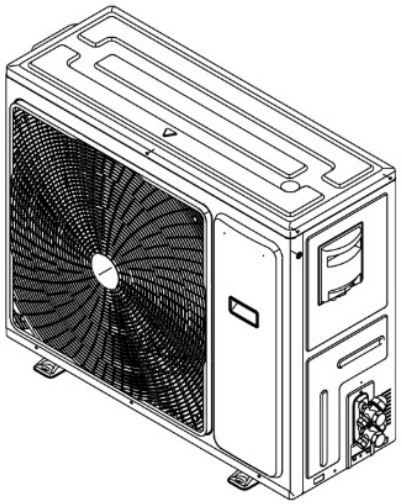

Model	W	H	D
FSHSR36B3D	35 3/8"	29 4/8"	13 3/8"

REFRIGERATION LINE SETS*

Kit#	Length (ft.)	Liquid	Suction	System Model
T32150	15'	1/4"	3/8"	FSHW091C, FSHW121C
T32350	35'	1/4"	3/8"	

Kit#	Length (ft.)	Liquid	Suction	System Model
T42150	15'	1/4"	1/2"	FSHW183D
T53250	25'	3/8"	5/8"	FSHW243D, FSHW363D

*Insulated line sets are available for all Friedrich split systems in 15 ft. and 35 ft. lengths. Each line set is equipped with flare nuts on both ends. Both liquid and suction lines are insulated. Line sets can be joined together with field supplied double male connectors. Each system requires one line set for each indoor unit installed.

REFRIGERATION LINE SETS MIN./MAX. LENGTHS

System Model	Min. (ft.)	Max. (ft.)
FSHW091C, FSHW121C	10	66
FSHW183D, FSHW243D	10	98
FSHW363D	15	98

TORQUE WRENCH SETTINGS

Outside Diameter		Torque	
mm	inch	ft-lbs.	N·m
6.35	1/4	13 – 18	17.6 – 24.5
9.52	3/8	25 – 30	33.3 – 41.2
12.7	1/2	40 – 47	53.9 – 64.7
15.88	5/8	45 – 59	61.7 – 80.4

ACCESSORIES



FPWC1 – Optional hard-wired controller for Floating Air wall-mounted and cassette indoor models. Included with concealed ducted models. Not compatible with AHU indoor models. See your Friedrich representative for options.



FreshAire Purifier APWM1 by iWave® – Optional accessory for all wall-mounted ductless models that kills mold, bacteria and viruses—while effectively removing odors and VOCs.